Table of Contents

1. Introduction
2. 1st training session – 02.12.2025
3. 2nd training session – 03.12.2025
4. 3rd training session – 04.12.2025
5. 4th training session – 09.12.2025
6. 5th training session – 10.12.2025
7. 6th training session – 11.12.2025
8. 7th training session – 16.12.2025

RNE Joint Office – PCS Support team: support.pcs@rne.eu
PCS CB API documentation: publicly available under this link

Introduction

Target audiences

Current and future PCS CB API users, and anyone interested in knowing more about PCS CB API

Recommended prior knowledge for participants and viewers of the meeting recordings

- Familiarity with TAF/TAP TSI
- Familiarity with the topics of the PCS CB general introduction and training sessions from November 2025 (e.g. API architecture, communication flows): publicly available under this link

By the end of this training phase, participants will be able to:

- Navigate through the Feasibility Study process and New Path Request process
- Understand some key concepts (e.g. Path Request split)
- Complete test actions
- Collect answers to their questions (e.g. substantial time reserved for Q&A during each session)

RNE Joint Office – PCS Support team: support.pcs@rne.eu

December training phase: what would you like to be addressed?

Focus: Feasibility Study process and New Path Request process

Planned scope
Available under this link (section: December 2025 training sessions)

Inputs from 02.12.2025 session:
- Overview of the Path Cancellation process (Croatian Railways): an introduction will take place on the 16.12 session. The training for this process type will take place in April / May (exact dates not yet defined).

Inputs from 03.12.2025 session:
- None (no participant joined the session)

Inputs from 09.12.2025 session:
- None (no participant joined the session)

Inputs from 10.12.2025 session:
- None

DIGITAL CAPACITY MANAGEMENT

01

1st training session – 02.12.2025

Table of Content

1. Feasibility Study process presentation
2. Group testing and demonstration approach
3. Feasibility Study process group testing and / or live demonstration
4. Questions and Answers

RNE Joint Office – PCS Support team: support.pcs@rne.eu
PCS CB API documentation: publicly available under this link

Feasibility Study process presentation

Technical specifications:

- Main document:
  - Section 4.4
  - Section 5.1 (where relevant)
  - Section 5.10

Group testing and live demonstration approach

Criteria for the selection of the approach to be applied during the training session:

- If at least one participant wants to actively test (voluntary basis): group testing
- If no participant wants to actively test: demonstration by RNE JO only

Group Testing Characteristics

- Active participant sends/receives messages via SoapUI or CI, or checks RNE CI logs
- Configuration handled by RNE JO and the participant
- Each sub-action of the message sequence is tested step by step
- RNE JO demonstrates while participants replicate actions in parallel
- If difficulties arise: lLive troubleshooting
- Registration form (section: December 2025 training sessions)

Approach for the 1st session (to be defined for each session)

- Live demonstration

Feasibility Study process group testing and / or live demonstration

Feasibility Study Start by the Leading Applicant

- Technical specifications chapter **5.10.1**
- Inbound sub-action: **263 (PCoM)**
- Outbound sub-action(s): **264 (PCoM), 265 (PCoM), 266 (OIM)**

Path request creation/update by an Involved Applicant

- Technical specifications chapter **5.1.5**
- Inbound sub-action: **28 (PRM)**
- Outbound sub-action(s): **30 (OIM)**

Path request finalisation by an Involved Applicant

- Technical specifications chapter **5.1.7**
- Inbound sub-action: **48 (PCoM)**
- Outbound sub-action(s): **53 (PCoM)**

Draft offer creation/update by an Involved IM

- Technical specifications chapter **5.1.14**
- Inbound sub-action: **111 (PDM)**
- Outbound sub-action(s): **117 (OIM)**

Promotion to Feasibility Study Result by the Leading IM

- Technical specifications chapter **5.10.7**
- Inbound sub-action: **290 (PCoM)**
- Outbound sub-action(s): **291 (PCoM), 293 (PDM)**

Questions & Answers

Question 1

- Marija Prša – HZ-I: We have not previously done Path Cancellation via PCS, what will the process look like?
  - Answer – RNE JO: RNE PCS API team will prepare to be able to answer this question in detail on the 16.12 session.

Conclusion

- Covered topics:
  - Feasibility Study process presentation
  - Group testing and demonstration approach
  - Feasibility Study process group testing and / or live demonstration

- Next training sessions in December: available under this link (section: December 2025 training sessions)

DIGITAL CAPACITY MANAGEMENT

02

2nd training session – 03.12.2025

RNE
RailNetEurope

Table of Content

1. New Path Request process presentation (session's focus: until Pre-booking completion)
2. Path Request split functionality presentation
3. OffsetToReference functionality presentation
4. New Path Request process group testing and / or live demonstration
5. Questions and Answers

RNE Joint Office – PCS Support team: support.pcs@rne.eu
PCS CB API documentation: publicly available under this link

New Path Request process presentation

Technical specifications:

- Main document:
  - Section 4.1
  - Section 5.1 (where relevant)
  - Section 5.2

- Appendix A

Path Request split functionality presentation

Technical specifications:

- Main document:
  - Section 3.2.3.15 (paragraph: Path request split functionality)

RNE PCS Support Administrator view

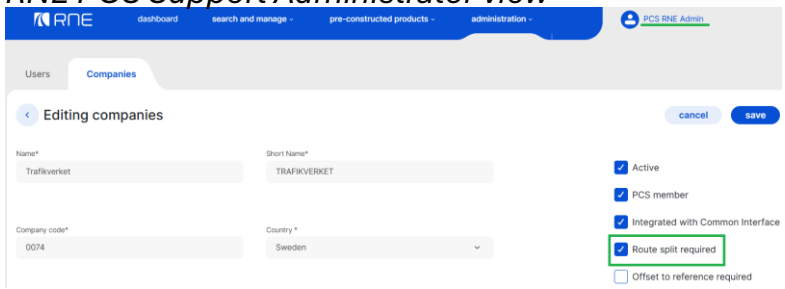

Example: 2 PRs created as a result of the PR split

IDs

Reference train level IDs

Reference train ID	TR 2174-HLZ*ZEEQNMXL-00-2026
Route ID 1	RO 2174-PUH-KI9OC09L-01-2026
Route ID 2	RO 2174-TZ25GU4BD0VR-01-2026

Territory level IDs

DBCDE / TRAFIKVERKET

Path PR 2180-3T1RUEYGZ*RT-01-2026 PR 2180-YIIUT2RR8C2F-01-2026

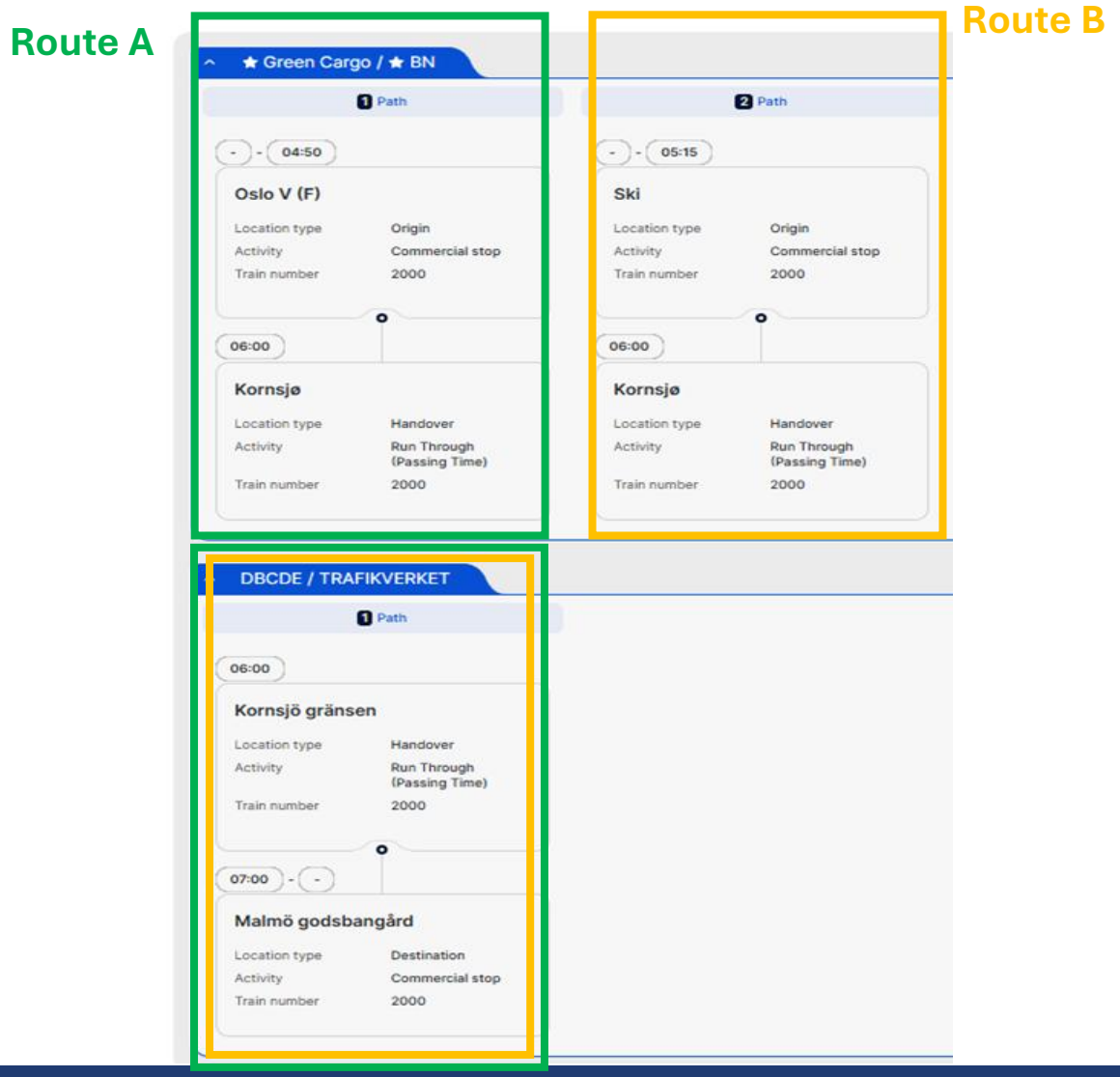

RNE RailNetEurope

OffsetToReference functionality presentation

Technical specifications:

- Main document:
  - Section 3.2.3.5

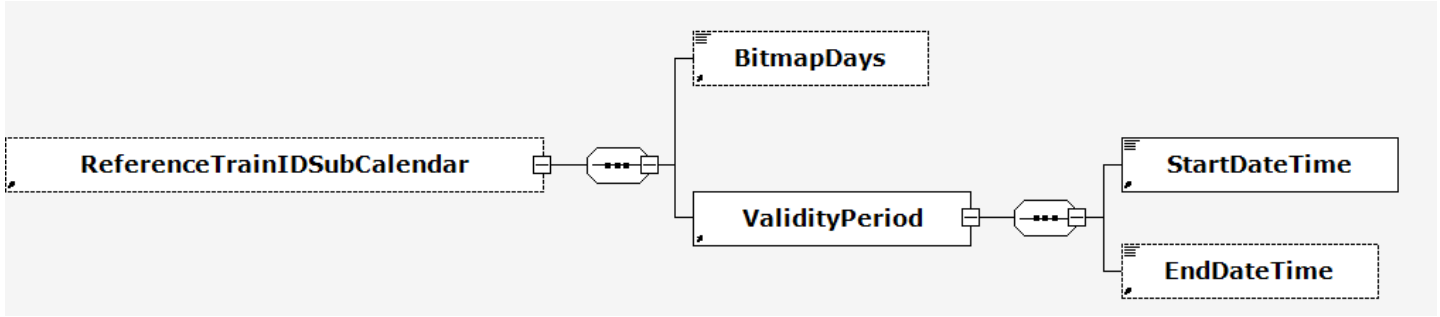

RNE PCS Support Administrator view

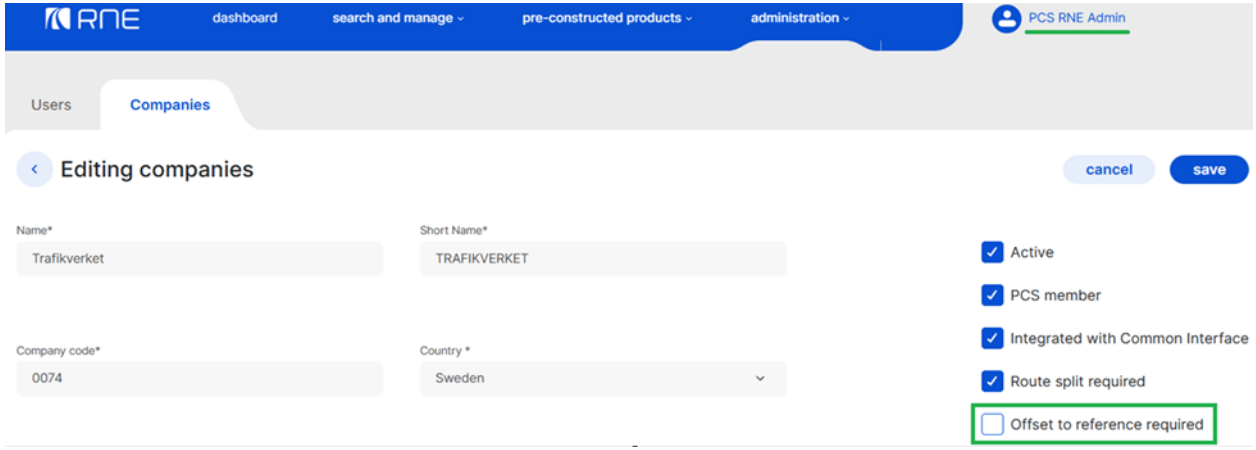

Group testing and live demonstration approach

Criteria for the selection of the approach to be applied during the training session:

- If at least one participant wants to actively test (voluntary basis): group testing
- If no participant wants to actively test: demonstration by RNE JO only

Group Testing Characteristics

- Active participant sends/receives messages via SoapUI or CI, or checks RNE CI logs
- Configuration handled by RNE JO and the participant
- Each sub-action of the message sequence is tested step by step
- RNE JO demonstrates while participants replicate actions in parallel
- If difficulties arise: lLive troubleshooting
- Registration form (section: December 2025 training sessions)

Approach for the 2nd session

- Live demonstration

New Path Request process group testing and / or live demonstration

Reference train creation by the Leading Applicant

- Technical specifications chapter **5.1.1**
- Inbound sub-action: **1 (PRM)**
- Outbound sub-action(s): **4 (OIM)**

Path request creation/update by an Involved Applicant*

- Technical specifications chapter **5.1.5**
- Inbound sub-action: **25 (PRM)**
- Outbound sub-action(s): **30 (OIM)**

Path request finalisation by an Involved Applicant

- Technical specifications chapter **5.1.7**
- Inbound sub-action: **45 (PCoM)**
- Outbound sub-action(s): **50 (PCoM)**

Pre-booking completion by the RFC

- Technical specifications chapter **5.1.11**
- Inbound sub-action: **GUI only**
- Outbound sub-action(s): **70 (PRM), 75 (PCoM)**

***Path request update shown 4 times:**

1. **Error returned due to missing OTR/ReferenceTrainIDSubCalendar**
2. **OTR/ReferenceTrainIDSubCalendar included, message is successful**
3. **Path Request split was triggered**
4. **Error returned because a day was added outside of PaP availability**

Questions & Answers

No questions (the session had no attendees)

Conclusion

- Covered topics:
  - New Path Request process presentation
  - Path Request split functionality presentation
  - OffsetToReference functionality presentation
  - New Path Request process group live demonstration

- Next training sessions in December: available under this link (section: December 2025 training sessions)

DIGITAL CAPACITY MANAGEMENT

03

3rd training session – 04.12.2025

RNE
RailNetEurope

Table of Contents

1. Questions and Answers

RNE Joint Office – PCS Support team: support.pcs@rne.eu
PCS CB API documentation: publicly available under this link

Questions & Answers

No questions (the session had no attendees)

DIGITAL CAPACITY MANAGEMENT

04

4th training session – 09.12.2025

Table of Contents

1. New Path Request process presentation (session's focus: from path request submission until draft offer submission)
2. Path Request split functionality presentation
3. OffsetToReference functionality presentation
4. New Path Request process group testing and / or live demonstration
5. Questions and Answers

RNE Joint Office – PCS Support team: support.pcs@rne.eu
PCS CB API documentation: publicly available under this link

New Path Request process presentation

Technical specifications:

- Main document:
  - Section 4.1
  - Section 5.1 (where relevant)
  - Section 5.2

- Appendix A

Path Request split functionality presentation

Technical specifications:

- Main document:
  - Section 3.2.3.15 (paragraph: Path request split functionality)

RNE PCS Support Administrator view

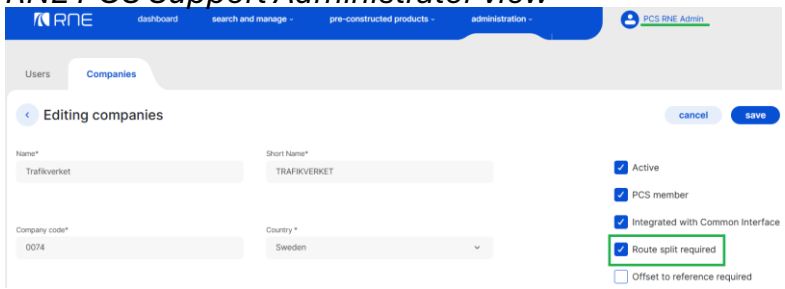

Example: 2 PRs created as a result of the PR split

IDs

Reference train level IDs

Reference train ID	TR 2174-HLZ*ZEEQNMXL-00-2026
Route ID 1	RO 2174-PUH-KI9OC09L-01-2026
Route ID 2	RO 2174-TZ25GU4BD0VR-01-2026

Territory level IDs

DBCDE / TRAFIKVERKET

Path PR 2180-3T1RUEYGZ*RT-01-2026 PR 2180-YIIUT2RR8C2F-01-2026

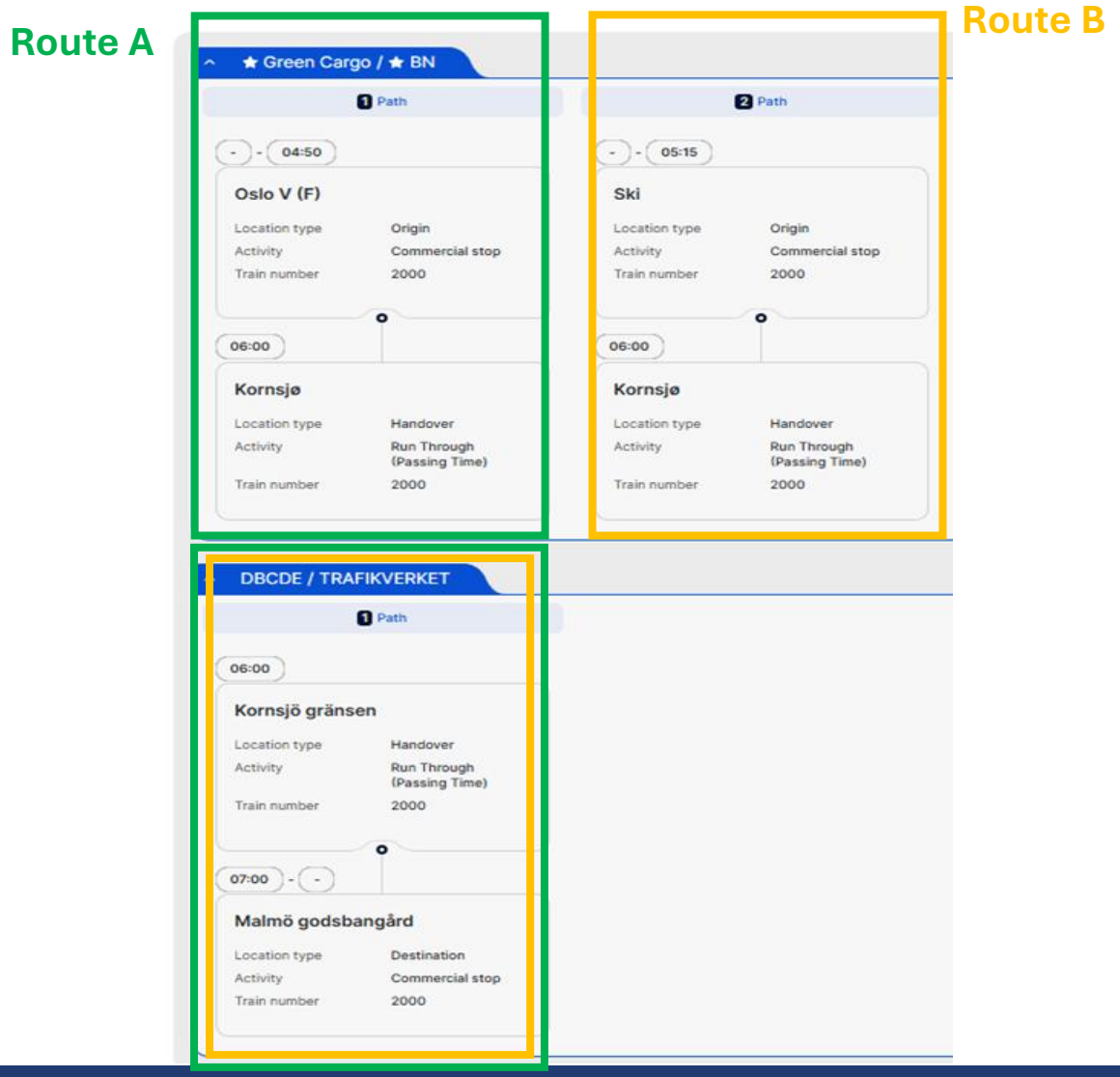

RNE RailNetEurope

OffsetToReference functionality presentation

Technical specifications:

- Main document:
  - Section 3.2.3.5

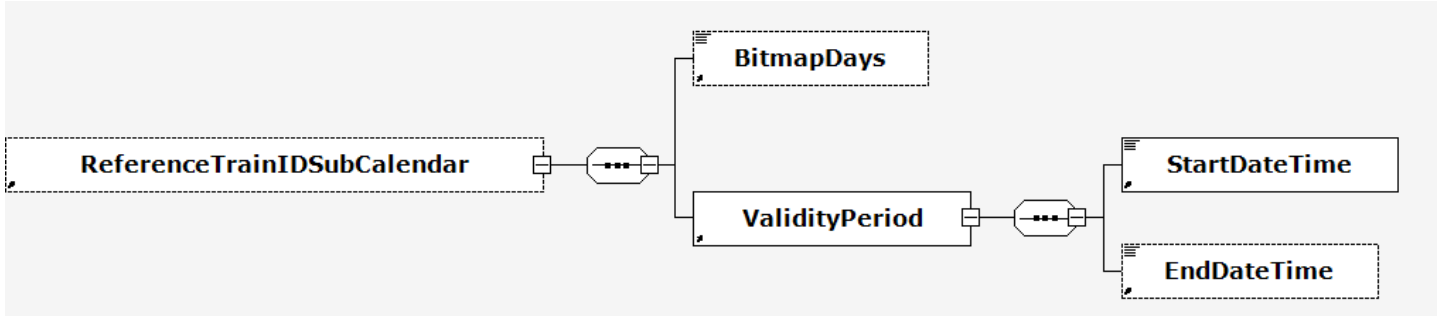

RNE PCS Support Administrator view

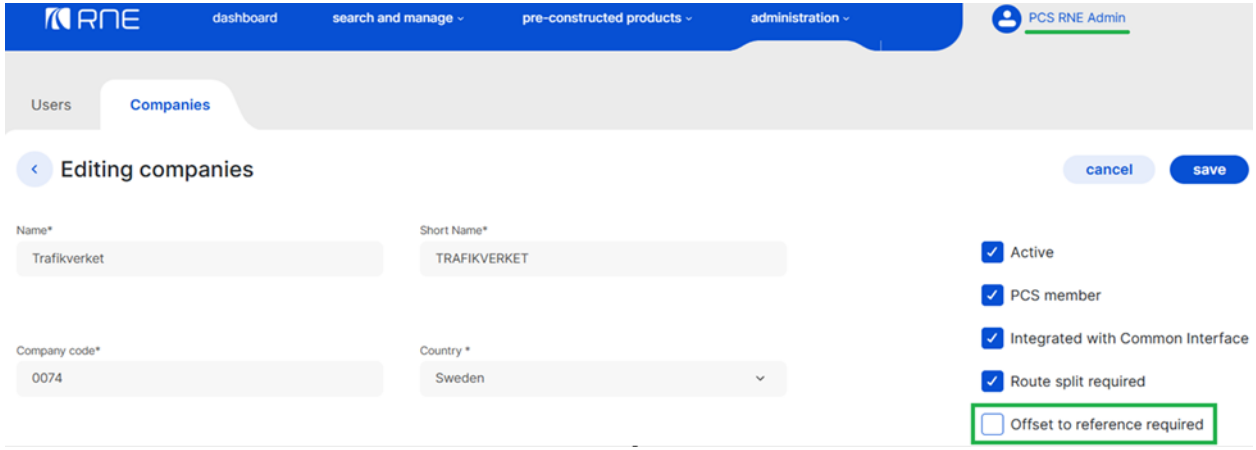

Group testing and live demonstration approach

Criteria for the selection of the approach to be applied during the training session:

- If at least one participant wants to actively test (voluntary basis): group testing
- If no participant wants to actively test: demonstration by RNE JO only

Group Testing Characteristics

- Active participant sends/receives messages via SoapUI or CI, or checks RNE CI logs
- Configuration handled by RNE JO and the participant
- Each sub-action of the message sequence is tested step by step
- RNE JO demonstrates while participants replicate actions in parallel
- If difficulties arise: lLive troubleshooting
- Registration form (section: December 2025 training sessions)

Approach for the 4rd session

- Live demonstration

New Path Request process group testing and / or live demonstration

Path request submission by the Leading Applicant (PaPs included in the reference train)

- Technical specifications chapter **5.1.10**
- Inbound sub-action: **65 (PCoM)**
- Outbound sub-action(s): **75/80/83/86 (PCoM), 70/86 (PRM)**

Pre-booking completion by the RFC

- Technical specifications chapter **5.1.11**
- Inbound sub-action: **GUI only**
- Outbound sub-action(s): **70 (PRM), 75 (PCoM)**

Draft offer creation by an Involved IM*

- Technical specifications chapter **5.1.14**
- Inbound sub-action: **108 (PDM)**
- Outbound sub-action(s): **114 (OIM)**

Draft offer update by an Involved IM

- Technical specifications chapter **5.1.14**
- Inbound sub-action: **108 (PDM)**
- Outbound sub-action(s): **114 (OIM)**

Draft offer finalisation by an Involved IM

- Technical specifications chapter **5.2.1**
- Inbound sub-action: **120 (PCoM)**
- Outbound sub-action(s): **121 (PCoM)**

***Draft offer creation shown 2 times:**

1. **OTR/ReferenceTrainIDSubCalendar missing, ErrorMessage is returned**
2. **OTR/ReferenceTrainIDSubCalendar added, message is successful**

Questions & Answers

No questions (the session had no attendees)

Conclusion

- Covered topics:
  - New Path Request process presentation
  - Path Request split functionality presentation
  - OffsetToReference functionality presentation
  - New Path Request process group live demonstration

- Next training sessions in December: available under this link (section: December 2025 training sessions)

DIGITAL CAPACITY MANAGEMENT

05

5th training session – 10.12.2025

RNE
RailNetEurope

Table of Contents

1. New Path Request process presentation (session's focus: from Observations until Allocation)

2. New Path Request process group testing and / or live demonstration

3. Questions and Answers

RNE Joint Office – PCS Support team: support.pcs@rne.eu
PCS CB API documentation: publicly available under this link

New Path Request process presentation

Technical specifications:

- Main document:
  - Section 4.1
  - Section 5.1 (where relevant)
  - Section 5.2

- Appendix A

Group testing and live demonstration approach

Criteria for the selection of the approach to be applied during the training session:

- If at least one participant wants to actively test (voluntary basis): group testing
- If no participant wants to actively test: demonstration by RNE JO only

Group Testing Characteristics

- Active participant sends/receives messages via SoapUI or CI, or checks RNE CI logs
- Configuration handled by RNE JO and the participant
- Each sub-action of the message sequence is tested step by step
- RNE JO demonstrates while participants replicate actions in parallel
- If difficulties arise: live troubleshooting
- Registration form (section: December 2025 training sessions)

Approach for the 5th session

- Live demonstration

New Path Request process group testing and / or live demonstration

Draft offer submission by the RFC

- Technical specifications chapter **5.2.5**
- Inbound sub-action: **GUI only**
- Outbound sub-action(s): **129 (PCoM), 130 (PDM)**

Comment creation to a draft offer by an Involved Applicant

- Technical specifications chapter **5.2.6**
- Inbound sub-action: **132 (PDRM)**
- Outbound sub-action: **133 (PDRM)**

Promotion to post processing by the Leading Applicant

- Technical specifications chapter **5.2.9**
- Inbound sub-action: **138 (PCM)**
- Outbound sub-action(s): **139 (PCM), 140 (PDRM)**

Final offer update by an Involved IM

- Technical specifications chapter **5.1.15**
- Inbound sub-action: **147 (PDM)**
- Outbound sub-action(s): **148 (OIM)**

Final offer submission by the RFC

- Technical specifications chapter **5.1.19**
- Inbound sub-action: **GUI only**
- Outbound sub-action(s): **166 (PCoM), 169 (PDM)**

Path Booking Allocation by an Involved IM

- Technical specifications chapter **5.1.24**
- Inbound sub-action: **206 (PDM)**
- Outbound sub-action(s): **213 (PDM), 218 (PCoM)**

Questions & Answers

No questions (the session had no attendees)

Conclusion

- Covered topics:
  - New Path Request process presentation (observations to allocation)
  - New Path Request process group live demonstration (observations to allocation)

- Next training sessions in December: available under this link (section: December 2025 training sessions)

DIGITAL CAPACITY MANAGEMENT

06

6th training session – 11.12.2025

RNE
RailNetEurope

Table of Content

1. New Path Request process presentation (session's focus: with partial offer ~~and harmonisation~~)
2. Group testing and demonstration approach
3. New Path Request process group (partial offer) testing and / or live demonstration
4. Questions and Answers

RNE Joint Office – PCS Support team: support.pcs@rne.eu
PCS CB API documentation: publicly available under this link

New Path Request process presentation

Technical specifications:

- Main document:
  - Section 4.1
  - Section 5.1 (where relevant)
  - Section 5.2

- Appendix A

Group testing and live demonstration approach

Criteria for the selection of the approach to be applied during the training session:

- If at least one participant wants to actively test (voluntary basis): group testing
- If no participant wants to actively test: demonstration by RNE JO only

Group Testing Characteristics

- Active participant sends/receives messages via SoapUI or CI, or checks RNE CI logs
- Configuration handled by RNE JO and the participant
- Each sub-action of the message sequence is tested step by step
- RNE JO demonstrates while participants replicate actions in parallel
- If difficulties arise: lLive troubleshooting
- Registration form (section: December 2025 training sessions)

Approach for the 3rd session

- To update at the beginning of the session

New Path Request process group testing and / or live demonstration

Switch to partial by an Involved IM

- Technical specifications chapter **5.5.1**
- Inbound sub-action: **313 (PCoM)**
- Outbound sub-action(s): **316 (PCoM)**

Draft offer creation/update and finalisation by an Involved IM (Partial)

- Technical specifications chapter **5.2.2**
- Inbound sub-action: **122 (PDM)**
- Outbound sub-action(s): **123 (OIM), 124 (PCoM)**

Draft offer submission by an Involved IM (Partial)

- Technical specifications chapter **5.5.5**
- Inbound sub-action: **418 (PCoM)**
- Outbound sub-action(s): **129 (PCoM), 130 (PDM)**

Promotion to Post-Processing by an Involved Applicant (Partial)*

- Technical specifications chapter **5.5.6**
- Inbound sub-action: **492 (PCM)**
- Outbound sub-action(s): **139 (PCM), 321 (PCoM – if merge to full)**

***Promotion to Post Processing shown 2 times:**

1. **Promotion for first territory, RT stays in partial state**
2. **Promotion for second territory, RT is merged to full (also see 5.5.3)**

Questions & Answers

No questions (the session had no attendees)

Conclusion

- Covered topics:
  - New Path Request process presentation (focus: partial offer)
  - New Path Request process group live demonstration

- Next training sessions in December: available under this link (section: December 2025 training sessions)

DIGITAL CAPACITY MANAGEMENT

07

7th training session – 16.12.2025

Questions and Answers

Question 1

- Marija Prša – HZ-I: We have not previously done Path Cancellation via PCS, what will the process look like? (question from the session on 02.12)
- Answer – RNE JO: introduction during the 16.12 session

Contact

RNE Joint Office – PCS Support team: support.pcs@rne.eu

RailNetEurope
Austria Campus 3
Jakov-Lind-Straße 5
1020 Vienna, Austria
www.rne.eu